MT-600/8000 series

MT-6050i

Installation Instruction

1.0 Installation and Startup Guide

Install Environment

Where Used	The MT-600/8000 Series is designed for industrial. The temperature range of operating is from 32 to 113 °F (0 to 45 °C), as majority of industrial environments. It may not be suitable for using in certain outdoor applications. Please consult the factory for advised usage in outdoor applications.
NEMA Rating	The MT-600/8000 Series front bezel is NEMA 4 rated. When installed properly in a NEMA 4 panel, the NEMA 4 rating of the panel will not be compromised. This means that fluids will not enter the panel during wash downs.
Electrical Environment	The MT-600/8000 Series has been tested to conform to European CE requirements. This means that the circuitry is designed to resist the effects of electrical noise. This does not guarantee noise immunity in severe cases. Proper wire routing and grounding will insure proper operation.
Mechanical Environment	Avoid installing units in environments where severe mechanical vibration or shocks are present.

2.0 Installation Instructions

2.1 Mounting Instructions

2.1.1 Location Considerations

Care should be taken when locating equipment behind the unit to ensure that AC power wiring, PLC output modules, contactors, starters and relays, and any other source of electrical interference are located away from the back of the unit.

Particular note should be taken to the position of variable speed drives and switching power supplies. Their input and load cables should be screened to a central star earth point.

2.1.2 Making a NEMA-4 Mounting

Panel Details

The unit can be mounted into panels with a depth of 4”(105mm). It is recommended that the unit be mounted on the front panel of a steel enclosure, through an appropriate opening*. Allow a clearance of 1”(25mm) around the sides of the unit for mounting hardware. Allow clearance for cable connections to the back of the unit. Unit depth may vary according to cable type used. Typically, plan a depth to accommodate at least 4”(105mm) behind the panel.

NEMA-4 Mounting

Put the unit through the panel cut out. Slide the clamps into the 4 holes provided around the case. Tighten the clamping screws in an even pattern until the unit is secured in the panel.

Caution!

Do not over tighten mounting clamps!

Note: **Specifications**

Note: To seal to NEMA-4 specifications, all supplied mounting clamps must be used and panel cannot flex more than 0.010”.

2.1.3 Environmental Considerations

- The MT-600/8000 are to be used indoors as built in displays. Make sure that the displays are installed correctly and that the operating limits are followed (See Specifications).
- Do not operate the unit in areas subject to explosion hazards due to flammable gases, vapors or dusts.
- The unit should not be installed where fast temperature variations and/or high humidity are present. This will cause condensation of water in the device.
- Do not install these terminals in environments where have inflammable gases.

2.2 Power Connections

Make sure that all local and national electrical standards are met when the installing the unit. Contact your local authorities to determine which codes apply.

2.2.1 Power Requirements

Power

The MT-600/8000 can be powered by DC power only. The specified voltage range is 24±20% Volts DC. This insures compatibility with most controller DC systems.

The power conditioning circuitry inside the unit is accomplished by a switching power supply. The peak starting current can be as high as 700mA.

Fusing Requirements

If the display does not come on within 2 seconds of power up, remove power. An internal fuse will prevent damage if the polarity of the DC power is incorrect. Check wiring to insure proper connections and try to power up again.

Caution High Voltage

An Internal fuse will prevent damage for over voltage condition however it isn’t guaranteed.

DC voltage sources should provide proper isolation from main AC power and similar hazards.

Caution Emergency Stop

A Hard-wired EMERGENCY STOP should be fitted in any system using an MT-600/8000 to comply with ICS Safety Recommendations.

Caution Supply Voltage Condition

Do not power the MT-600/8000 and inductive DC loads, or input circuitry to the controller, with the same power supply. Note: The 24 VDC output from some controllers may not have enough current to power the MT-600/8000.

Caution Wire Routing

Wire lengths should be minimized (Maximum 1600' (500 m) shielded, 1000' (300 m) unshielded).
Wires should be run in pairs with a neutral or common paired with a hot or signal line.
If wiring is to be exposed to lightning or surges, use appropriate surge suppression devices.
Keep AC, high energy, and rapidly switching DC wiring separate from signal wires.
Equip ungrounded DC supplies with a resistor and capacitor in parallel to earth ground. This provides a path for static and high frequency dissipation. Typical values to use are 1MOhm and 4700pF.

Caution

To prevent the HMI from becoming damaged or having sound output issues, after turning the device off, please wait 10 seconds before turning the device on again.

Connection

To make a connection, strip about 3/8" of insulation off the end of the wire, turn the connector screw counterclockwise until the gap is wide open, insert the wire all the way in, and turn the screw clockwise until it's tight.
Connect positive DC line to the '+24V' terminal and the DC ground to the '0V' terminal.

2.2.2 Grounding Requirements

Chassis ground must be used. DC ground is not directly coupled to Earth ground internally. It is preferable not to ground DC negative return to chassis ground as poor site earths can introduce noise into a system, but if necessary an earth connection should be made, from the power supply return point to the central star earth point. Ground conductors should be as short and as large in size as possible. The conductors must always be large enough to carry the maximum short circuit current of the path being considered. Ground conductors should be connected to a tree from a central star earth ground point. This ensures that no ground conductor carries current from any other branch.

2.2.3 CE Requirements

To make an MT-600/8000 comply with EMC directives, and to reduce susceptibility to electrical interference, a separate #14 AWG ground wire should be taken to the chassis ground terminal of the power connector. This ground connection should be run directly to the central star earth connection point (as recommended in most Installation Instructions).

2.2.4 Safety Guidelines

This section presents recommended installation practices, and procedures. Since no two applications are identical, these recommendations should be considered as guidelines.

Hardware Considerations

WARNING!

The system designer should be aware that devices in Controller systems could fail and thereby create an unsafe condition. Furthermore, electrical interference in an operator interface, such as an MT-600/8000, can lead to equipment start-up, which could result in property damage and/or physical injury to the equipment operator.

If you, or your company, use any programmable control systems that require an operator or attendant, you should be aware that this potential safety hazard exists and take appropriate precautions. Although the specific design steps depend on your particular application, the following precautions generally

apply to installation of solid-state programmable control devices. In addition, these precautions conform to the guidelines for installation of Controllers as recommended in the NEMA ICS 3-304 Control Standards.

Programming Considerations

To conform with ICS Safety Recommendations, checks should be placed in the controller to ensure that all writable registers that control critical parts of plant or machinery have limit checks built into the program, with an out-of-limit safe shut down procedure to ensure safety of personnel.

ICS 3-304.81 Safety Recommendations:

Consideration should be given to the use of an emergency stop function, which is independent of the programmable controller.

Where the operator is exposed to the machinery, such as in loading or unloading a machine tool, or where the machine cycles automatically, consideration should be given to the use of an electromechanical override or other redundant means, independent of the programmable controller, for starting and interrupting the cycle.

If provision is required for changing programs while the equipment is in operation, consideration should be given to the use of locks or other means of assuring that only authorized personnel can make such changes.

These recommendations are intended as safeguards against the failure of critical components and the effects of such failures or the inadvertent errors that might be introduced if programs are changed while the equipment is in operation. *

- The ICS 3-304.81 Safety Recommendations are reproduced by permission of the National Electrical Manufacturers Association from NEMA ICS 3-304

2.3 Communications Connections

The ports as you look at the back of the case, are the ports for connecting to a PLC or some external device (Controller Connectors).

2.3.1 Connector COM1 [RS232]

Cable Requirements

Different cables are required for various devices.

Caution

Restrict cable length to less than 500’ (150m) for RS485/422 devices and 50’ (15m) for RS232 devices to avoid communications problems.
The COM light on the front of the MT-600/8000 will turn on with each Ethernet communication.
Shielded cable must be used for long lengths or cables run in an electrically noisy environment.
Do not run cables next to AC power lines or near sources of electrical noise.
Be sure that the cable ends have been inserted all of the way into mating connectors and are secure

Pin Designations

Pin assignment of the 9 Pin, Male, SUB-D, COM1 [RS-232]/ [RS-485] Port.

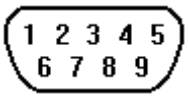

COM1 [RS-232]
COM1 [RS-485]

Pin#	Symbol	Com1[RS485] 4 wire	Com1[RS485] 2 wire	Com1[RS232]
1	Rx-	Rx-	Data-	
2	Rx+	Rx+	Data+	
3	Tx-	Tx-		
4	Tx+	Tx+		
5	GND			
6	TxD			Transmit
7				
8				
9	RxD			Receive

2.3.3 USB client port

Support USB client interface, such as mouse, keyboard, USB stick, printer…etc.

2.3.4 Dip Switch

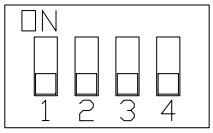

SW1	SW2	SW3	SW4	Mode
ON	OFF	OFF	OFF	Touch Screen Calibrate mode
OFF	ON	OFF	OFF	EB8000 System Tool Bar
OFF	OFF	ON	OFF	Boot Loader mode
OFF	OFF	OFF	ON	Reserve
OFF	OFF	OFF	OFF	Normal

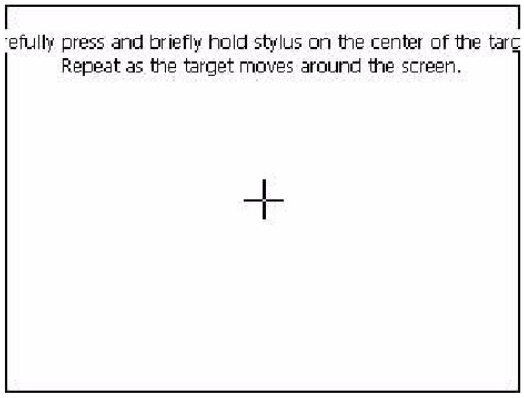

- Touch Screen Calibrate and Reset Password mode: In this mode when you power on the MT8000 series, the screen will display a “+” sign at the center of the screen. Use a stylus or finger to push the center of the “+” until it moves. The “+” moves to upper-left, upper-right, lower -left, lower-right and center. When all five “+” are done the “+” will disappear. The Touch Screen parameter will store at Flash Rom.

- If losing or forgetting system passwords, users can set Dip Switch 1 to “ON” position, the rest of Dips remain on “OFF” position and then reboot MT8000 series. Under this situation, MT8000 series will jump to Touch Adjust (Touch screen calibration) mode. After calibration, the pop-up window appears as the illustration below. Users will be inquired if restoring the system password to the default value.

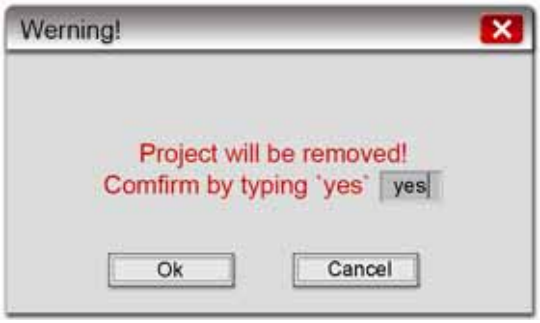

- When “YES” is chosen, another pop-up dialog appears as below. Users will be confirmed again if restoring the system password to the default value and will be asked to input “YES”. Then click OK. (The default password is 111111. However, other passwords, including download and upload password, have to be reset.)

Note: When the reset action is be taken, projects and saved data in the HMI will all be cleared.

2.4 CE Requirements

EU directives that apply to the MT-600/8000 Series:

- EMC Directive (89/336/EEC, 92/31/EEC, 93/68/EEC) electromagnetic emissions and immunity
- Machinery Directive (89/392/EEC, 91/368/EEC, 93/44/EEC, 93/ 68/EEC) machine safety
- MT-600/8000 products will be CE-marked to indicate compliance with the EMC Directive.

The MT-600/8000 Series has been designed to operate satisfactorily in electromagnetic noise (immunity) and without emitting high levels of electrical noise into the environment (emission). The units are designed to meet European Community standards when installed per the wiring instructions in this manual.

Compatibility Standards

The MT-600/8000 has been designed to meet electromagnetic compatibility for industrial environments.

• CISPR (EN 55011) Group 1, Class A Radiated Emissions levels

• EN50081-2 Generic emission standard, industrial environment (Also US FCC Class A)

• EN50082-2 Generic immunity standard, industrial environment

2.5 Limited Liability Warranty

Weintek products include the isolated power supply are covered by a limited liability warranty from defects in material and workmanship. This warranty does not apply :

(a) if, in the judgment of Weintek, the product fails due to damage from shipment, handling, storage, accident (natural and man-mad) ;

(b) if the product fails due to misuse, including but not limit to incorrect set-up and wiring, current leakage from machine platform and incorrect input power ;

(c) if the product has been maintained in a manner not conforming to product's instructions or has been modified in any way,

(d) if the serial number has been defaced or removed.

3.0 Specifications

	MT6050i
Hardware Specification	
Display	4.3" TFT LCD
Brightness	450 cd/m2
Color	65,536 colors
Contrast Ratio	500:1
Resolution (WxH dots)	480 x 272
Back light	LED
Backlight life time (avg.)	30,000 hr. min.
Touch panel	4 wires resistive type
Touch Accuracy	Active Area Length(X)±2%, Width(Y)±2%
I/O port	COM1 (RS-232/RS-485 2W/4W)
Ethernet port	N/A
USB	USB Client port x 1
Processor	32bit RISC CPU 400MHz
Flash memory	128MB
SD card slot	N/A
RTC	N/A
General Specification	
Input Power	24±20% VDC
Max Power Consumption	250 mA@24VDC Power Isolation Inside
Isolated Power Supply	Built-in
Protection structure	IP65 front panel (O ring seal)
Operating Temperature	0~45°C
Operation humidity	10-90% RH (non –condense)
Enclosure	Plastic
Dimensions WxHxD	128 x 102 x 38 mm
Panel cutout dimension	119 x 93 mm (4.685"x 3.661")
Weight	Approx. 0.3 kg (1.87 lbs)
Operating System	
Operating System	EB8000 3.0.0 or Newer

4.0 Dimensions of MT-6050i

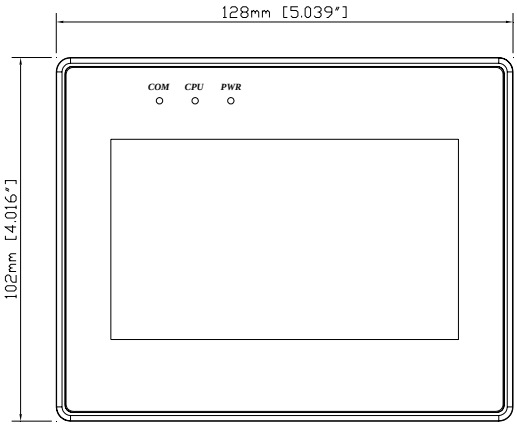

Front View

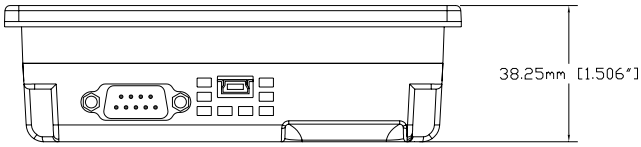

Bottom View

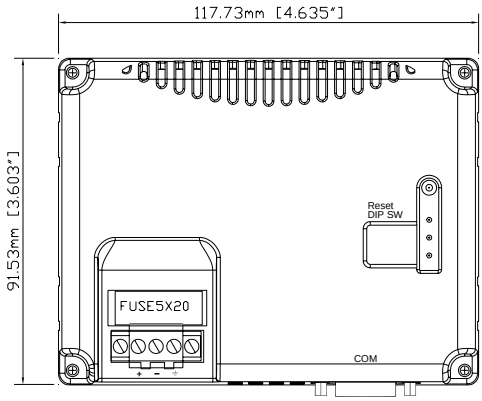

Rear View

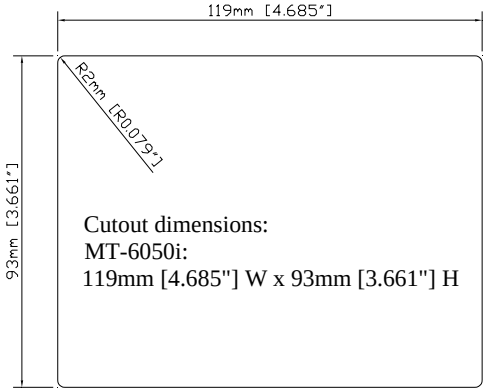

Pin Designations

Pin assignment of the 9 Pin, Male, SUB-D
Com1 [RS-232], Com1 [RS-485 2w/4w]

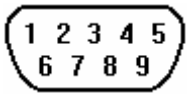

Pin#	Symbol	Com1[RS485] 4 wire	Com1[RS485] 2 wire	Com1[RS232]
1	Rx-	Rx-	Data-	
2	Rx+	Rx+	Data+	
3	Tx-	Tx-		
4	Tx+	Tx+		
5	GND			
6	TxD			Transmit
7				
8				
9	RxD			Receive